VALVE END VIEW (J1)	WIRING DIAGRAM	FEMALE END VIEW (J2)

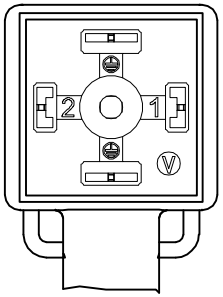

1 = WHITE
2 = BLACK
GND = N/C

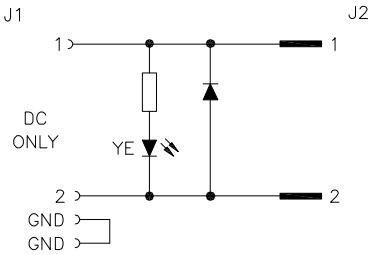

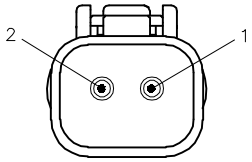

1 = WHITE
2 = BLACK

SPECIFICATIONS

DEUTSCH CONNECTOR	DT06-2S-E008
DEUTSCH WEDGE LOCK	W2S
DEUTSCH TERMINALS	0462-201-16141
CONTACT CARRIER MATERIAL (J1)	NYLON
MOLDED HEAD MATERIAL/COLOR	TPU/TRANSULUCENT BLACK (J1), TPU/BLACK (J2)
CONTACT MATERIAL/PLATING (J1)	BRASS/SILVER
RATED CURRENT [A]	4.0 A
RATED VOLTAGE [V]	24-48 VDC
OUTER CABLE JACKET MATERIAL/COLOR	TPE/BLACK
CONDUCTOR INSULATION MATERIAL	PVC
NUMBER OF CONDUCTORS [AWG]	2x18 AWG
TEMPERATURE RANGE	-40°C to +105°C (-40°F to +221°F)
PROTECTION CLASS	MEETS NEMA 1,3,4,6P AND IEC IP67

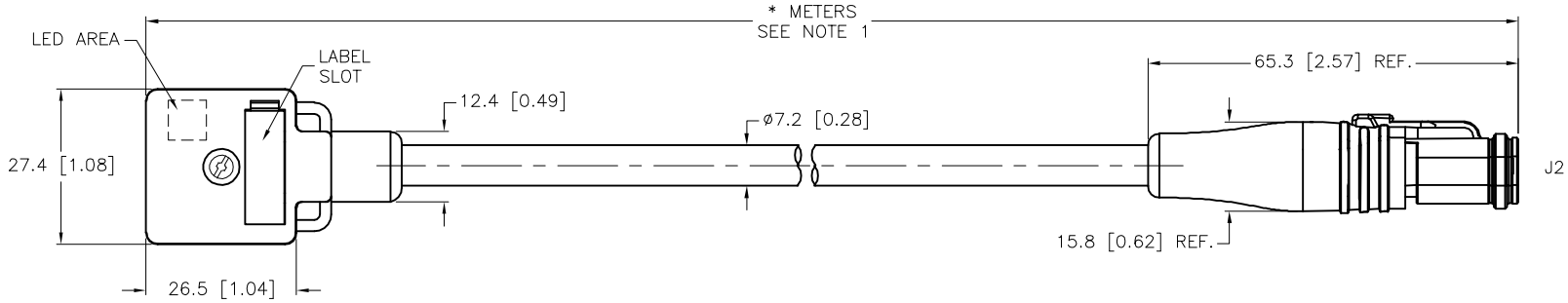

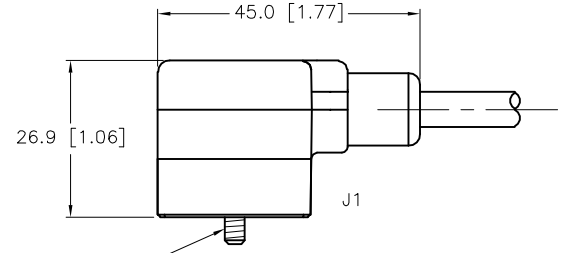

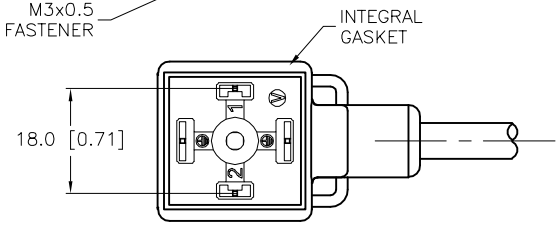

CABLE LENGTH	TOLERANCE *
ALL LENGTHS	+ 4% (OR 50mm) OF LENGTH - 0% (OR 0mm) OF LENGTH WHICHEVER IS GREATER
STRIP LENGTH	**TOLERANCE ***
0-7mm	±0.5mm
8-29mm	±1.0mm
30-49mm	±2.0mm
50-69mm	±3.0mm
70-100mm	±4.0mm
OVER 100mm	±5.0mm
* UNLESS OTHERWISE SPECIFIED	

SOURCE DRAWING - FOR REFERENCE ONLY

NOTES:

1. "*" INDICATES CABLE LENGTH IN METERS. CONTACT TURCK TO ORDER SPECIFIC LENGTHS.

REV	DESCRIPTION	BY	DATE	ECO NO.
B	UPDATE WIRING	NF	12/06/18	67872

RELATED DOCUMENTS
1.
2.
3.
4.

3RD ANGLE PROJECTION

THIS DRAWING IS CONFIDENTIAL AND THE PROPERTY OF TURCK INC. USE OF THIS DOCUMENT WITHOUT WRITTEN PERMISSION IS PROHIBITED.

TURCK
3000 CAMPUS DRIVE
MINNEAPOLIS, MN 55441
1-800-544-7769
(763) 553-7300
(763) 553-0708 fax
www.turck.us

MATERIAL: SEE SPECIFICATIONS

FINISH: SEE SPECIFICATIONS

ALL DIMENSIONS DISPLAYED ON THIS DRAWING ARE FOR REFERENCE ONLY

CONTACT TURCK FOR MORE INFORMATION

DRFT: NF | DATE: 05/02/18
APVD: C.K. | SCALE: 1=1.3

UNIT OF MEASUREMENT
MILLIMETER [INCH]
DO NOT SCALE THIS DRAWING

DESCRIPTION: VAS 21-F2125-*M-DT06-2S

IDENTIFICATION NO.

REV: B

FILE: 777041800

SHEET 1 OF 1